PARTS LIST
FOR REACH-IN MODELS:
CR1-TSI-HC, CF1-TSI-HC, CR2-TSI-HC, CF2-TSI-HC, CR3-TSI-HC

For Parts please Call (704) 900-2068

Revision Date: January 10, 2025

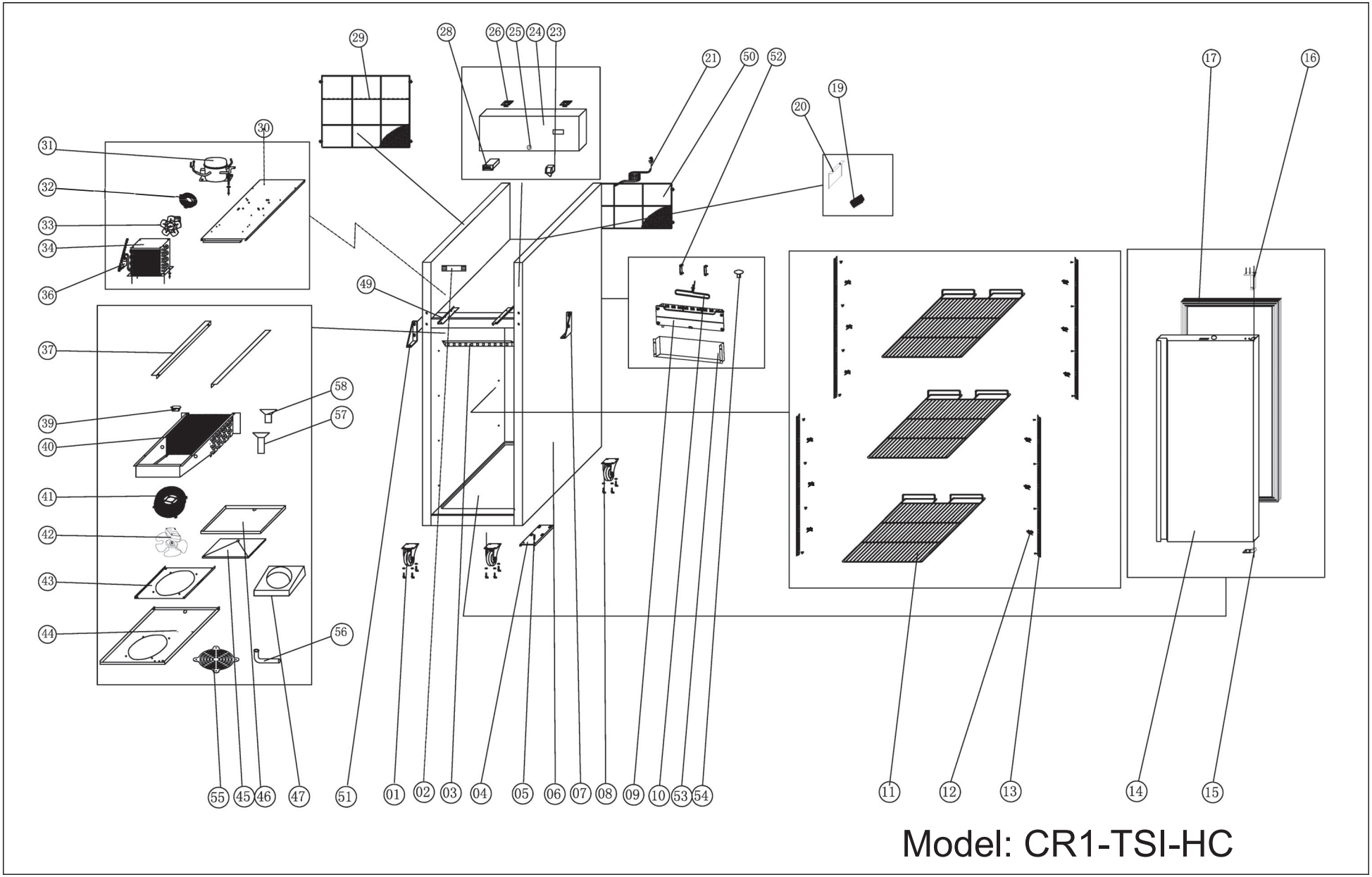

Model: CR1-TSI-HC

Parts List for Model: CR1-TSI-HC

No.	PART #	DESCRIPTION	QTY
1	H00316	CASTER, 4" DIAMETER W/BRAKE	2
2	H104070118	LED POWER SUPPLY (24VAC/6.7W)	1
3	C2194688	LED LIGHT STRIP (REACH-IN) (LED2835, 2.4W, 24 VDC)	1
4	C20021.1	HINGE, LOWER LEFT/RIGHT TOP-MOUNT (USE AFTER DATE CODE 2201)	1
5	H00327.1	HINGE PIN W/NUT & BUSHING (NEW STYLE)	1
6	NON STOCKING	CABINET	1
7	C20029	HINGE, UPPER RIGHT ONLY	1
8	H00317	CASTER, 4" DIAMETER, W/O BRAKE	2
9	C30302	CONDENSER DRAIN BOX, TOP MOUNT	1
10	HC0147	SUCTION PIPE	1
11	H00307	SHELF, 1D (21.57" X 24.33")	3
12	C3234860	PILASTER SHELF CLIP	12
13	H03343	PILASTER	4
14	HC0324-2	DOOR, SOLID, TOP MOUNT, SS INTERIOR, (AFTER DATE CODE 2201, HC)	1
15	H00326	HINGE AXIS JACKET, BOTTOM	1
16	HC0328	DOOR CLOSURE	1
17	H00325-2	GASKET, DOOR TOP MOUNT (24-3/4 X 61-7/16 BLACK)	1
19	H00215	TERMINAL BLOCK, 5 POLE	2
20	NON-STOCKING	MOUNTING BRACKET	1
21	C2194681	POWER CORD, 18AWG/NEMA 5-15P	1
23	C2194677	DOOR SWITCH 3 PIN WHITE (AFTER START OF HC)	1
24	HC0318-TSI-1	UPPER SHROUD, TOP MOUNT (REPLACES HC0318-TSI)	1
24	CC0318-TSI-1	UPPER SHROUD, TOP MOUNT (MOTAK/CENTAUR)	1
24	HC0318-TSI-1	UPPER SHROUD, TOP MOUNT (REPLACES HC0318-TSI)	1
24	CC0318-TSI-1	UPPER SHROUD, TOP MOUNT (MOTAK/CENTAUR)	1
25	HC00357	KEY-DOOR, LOCK (SOLD IN PACK OF TWO)	1
26	H00321	HINGE, SHROUD UPPER	2
28	H00219-2	CONTROLLER, DIXELL (XR20CX-4R0F1)	1
28	H00205	TEMPERATURE SENSOR NTC (118" LENGTH)	1

No.	PART #	DESCRIPTION	QTY
29	C20008	COVER, SCREEN, TOP, CONDENSER, 1DR	1
30	NON-STOCKING	COMPRESSOR MOUNTING PANEL	1
31	HC0001F	COMPRESSOR (EM2X3117U) W/ FILTER DRIER	1
31	HC0001K	START KIT FOR EM2X3117U	1
31	H00301	CAPILLARY TUBE .055" ID X 196.9" L	1
32	RD00111	CONDENSER FAN GRILL	1
33	H00110	CONDENSER FAN MOTOR, 9W, M4Q045-CA27-04/CA01	1
34	HC0346	CONDENSER COIL (HC-HGD12F)	1
36	H00341	FILTER DRIER	1
37	NON STOCKING	EVAPORATOR SUPPORT	2
39	H00335	SENSOR CLIP	1
40	HC000111	EVAPORATOR COIL (HC-27R)	1
41	H00112	EVAPORATOR FAN GUARD, WHITE	1
42	H00114-2	EVAPORATOR FAN MOTOR, ECM7108, L=600, 100-120V 50/60HZ, 14W	1
43	H5202004565	MOTOR SUPPORT, EVAP FAN	1
44	NON-STOCKING	EVAPORATOR COVER, WHITE	1
45	NON STOCKING	SUPPORT PAN	1
46	HC0142	DRAIN PAN, EVAPORATOR (USE AFTER TO 2204)	1
47	GHC3014	AIR DUCT	1
50	C20005	COVER, SCREEN, BACK CONDENSER	1
51	C20028	HINGE, UPPER LEFT ONLY	1
52	NON-STOCKING	DISCHARGE PIPE CLIP	2
53	C30002-2	CONDENSER DRAIN BOX COVER (USE FROM DATE CODE 2201)	1
54	H00336-1	DRAIN JOINT	1
55	H00121-1	EVAPORATOR FAN GUARD	1
56	H00336	DRAIN JOINT	1
57	G30002	DRAIN FITTING (F)	1
58	G30001	DRAIN PIPE FITTING	1

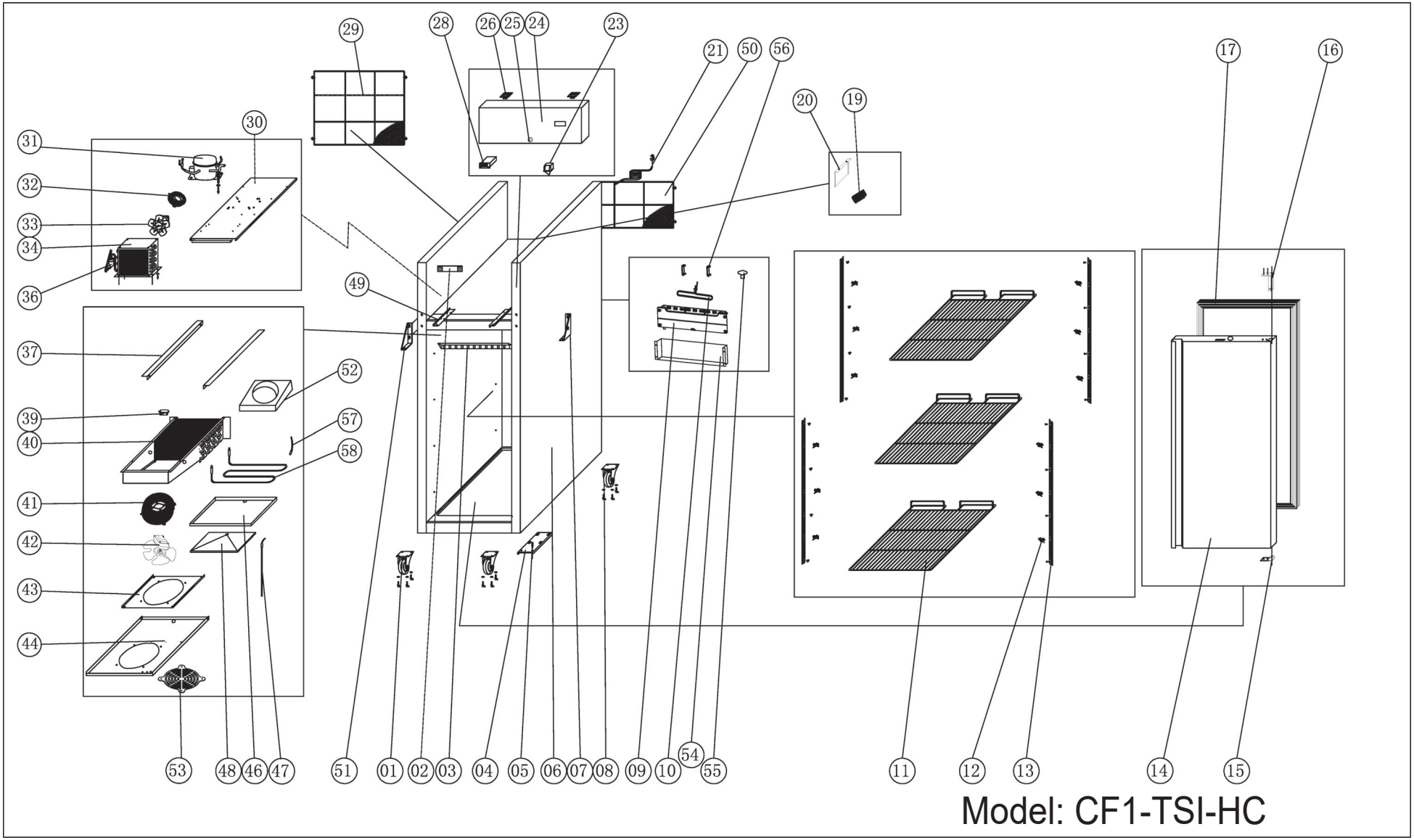

Model: CF1-TSI-HC

Parts List for Model: CF1-TSI-HC

No.	PART #	DESCRIPTION	QTY
1	H00316	CASTER, 4" DIAMETER W/BRAKE	2
2	H104070118	LED POWER SUPPLY (24VAC/6.7W)	1
3	C2194688	LED LIGHT STRIP (REACH-IN) (LED2835, 2.4W, 24 VDC)	1
4	C20021.1	HINGE, LOWER LEFT/RIGHT TOP-MOUNT (USE AFTER DATE CODE 2201)	1
5	H00327.1	HINGE PIN W/NUT & BUSHING (NEW STYLE)	1
6	NON STOCKING	CABINET	1
7	C20029	HINGE, UPPER RIGHT ONLY	1
8	H00317	CASTER, 4" DIAMETER, W/O BRAKE	2
9	C30302	CONDENSER DRAIN BOX, TOP MOUNT	1
10	HRI2000-1	SUCTION PIPE (REPLACES HRI2000)	1
11	H00307	SHELF, 1D (21.57" X 24.33")	3
12	C3234860	PILASTER SHELF CLIP	12
13	H03343	PILASTER	4
14	HC0324-2	DOOR, SOLID, TOP MOUNT, SS INTERIOR, (AFTER DATE CODE 2201, HC)	1
15	H00326	HINGE AXIS JACKET, BOTTOM	1
16	HC0328	DOOR CLOSURE	1
17	H00325-2	GASKET, DOOR TOP MOUNT (24-3/4 X 61-7/16 BLACK)	1
19	H00215	TERMINAL BLOCK, 5 POLE	1
20	NON-STOCKING	MOUNTING BRACKET	1
21	C2194684	POWER CORD, 14AWG/NEMA 5-15P	1
23	C2194677	DOOR SWITCH 3 PIN WHITE (AFTER START OF HC)	1
24	HC0318-TSI-1	UPPER SHROUD, TOP MOUNT (REPLACES HC0318-TSI)	1
24	CC0318-TSI-1	UPPER SHROUD, TOP MOUNT (MOTAK/CENTAUR)	1
25	HC00357	KEY-DOOR, LOCK (SOLD IN PACK OF TWO)	1
26	H00321	HINGE, SHROUD UPPER	2
28	HC0204	CONTROLLER, DIXELL (XR60CX-4R0F1)	1
28	H00205	TEMPERATURE SENSOR NTC (118" LENGTH)	2
29	C20008	COVER, SCREEN, TOP, CONDENSER, 1DR	1
30	NON STOCKING	COMPRESSOR MOUNTING PANEL	1

No.	PART #	DESCRIPTION	QTY
31	HC0025F	COMPRESSOR (EHX2155U) W/FILTER DRIER	1
31	HC0025K	START KIT FOR EHX2155U	1
31	H00302	CAPILLARY TUBE .055" ID X 169.25" L	1
32	RD00111	CONDENSER FAN GRILL	1
33	H00110	CONDENSER FAN MOTOR, 9W, M4Q045-CA27-04/CA01	1
33	HC0117-1	CONDENSER FAN BLADE	1
34	HC0346	CONDENSER COIL (HC-HGD12F)	1
36	H00341	FILTER DRIER	1
37	NON STOCKING	EVAPORATOR SUPPORT	1
39	H03335	SENSOR CLIP	1
40	HC000111	EVAPORATOR COIL (HC-27R)	1
41	H00112	EVAPORATOR FAN GUARD, WHITE	1
42	H00114-2	EVAPORATOR FAN MOTOR, ECM7108, L=600, 100-120V 50/60HZ, 14W	1
42	HC0116-F	EVAPORATOR FAN BLADE (FOR ALL HC0116-1, 2, 3 TYPE FAN MOTORS)	1
43	H5202004565	MOTOR SUPPORT, EVAP FAN	1
44	NON-STOCKING	EVAPORATOR COVER, WHITE	1
46	HC0142	DRAIN PAN, EVAPORATOR (USE AFTER TO 2204)	1
47	H00211	HEATER, DRAIN PIPE, (13W)	1
48	NON STOCKING	SUPPORT PAN	1
50	C20005	COVER, SCREEN, BACK CONDENSER	1
51	C20028	HINGE, UPPER LEFT ONLY	1
52	GHC3014	AIR DUCT	1
53	H108110138	EVAPORATOR FAN GUARD	1
54	C30002-2	CONDENSER DRAIN BOX COVER (USE FROM DATE CODE 2201)	1
55	H00336-1	DRAIN JOINT	1
56	NON-STOCKING	DISCHARGE PIPE CLIP	2
57	H00207	FUSE, THERMAL, DEFROST HEATER	1
58	HC0201	DEFROST HEATING ELEMENT	1

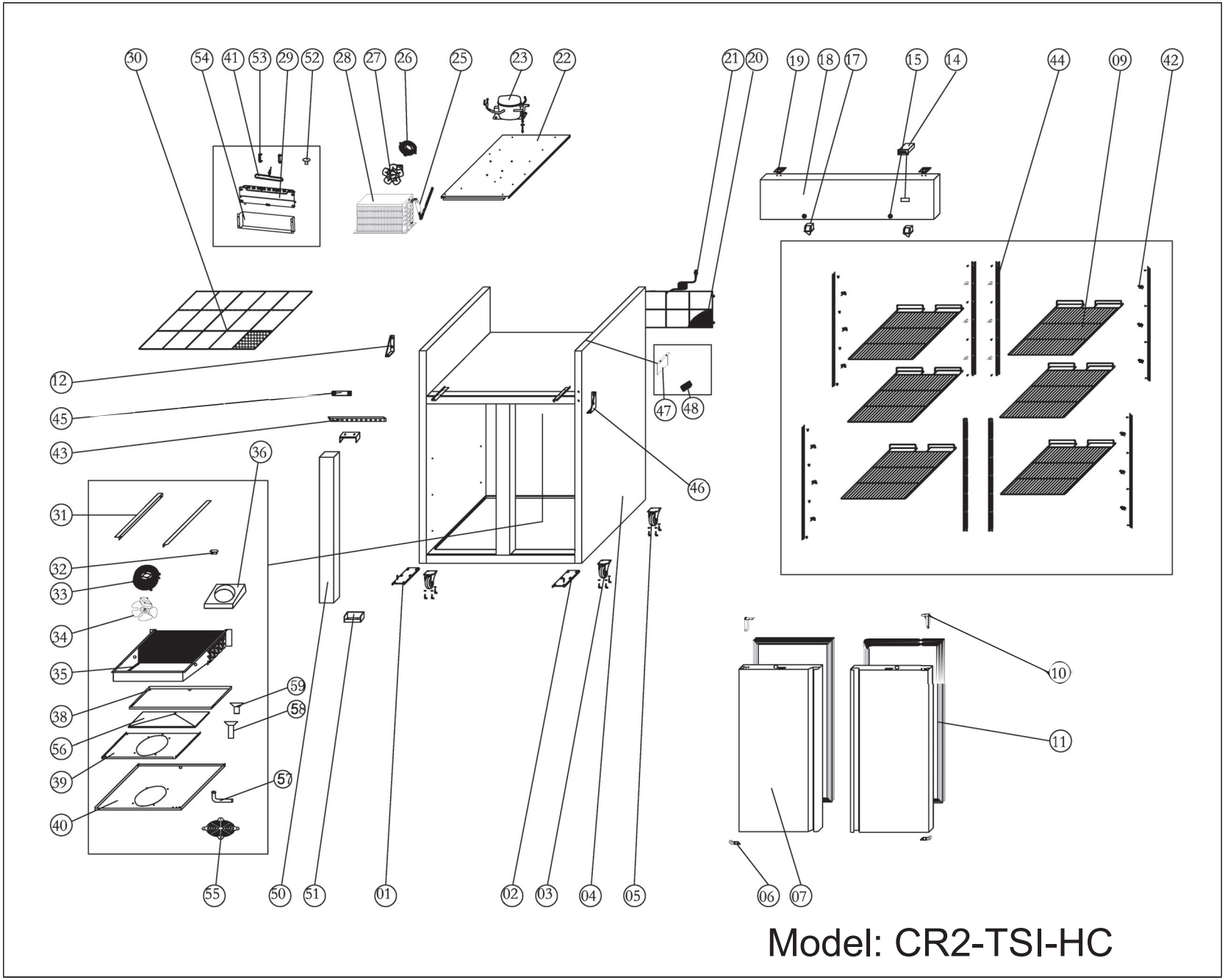

Model: CR2-TSI-HC

Parts List for Model: CR2-TSI-HC

No.	PART #	DESCRIPTION	QTY
1	H20022	HINGE, LOWER LEFT/RIGHT (TOP-MOUNT)	2
2	H00327.1	HINGE PIN W/NUT & BUSHING (NEW STYLE)	2
3	H00316	CASTER, 4" DIAMETER W/BRAKE	2
4	NON STOCKING	CABINET	1
5	H00317	CASTER, 4" DIAMETER, W/O BRAKE	2
6	H00326	HINGE AXIS JACKET, BOTTOM	2
7	HC0324-2	DOOR LEFT/RIGHT (SS INTERIOR)	1
9	H00308	SHELF, LEFT/RIGHT (23.62" X 24.33")	6
10	HC0328	DOOR CLOSURE	2
11	H00325-2	GASKET, DOOR TOP MOUNT (24-3/4 X 61-7/16 BLACK)	2
12	C20028	HINGE, UPPER LEFT ONLY	2
14	H00219-2	CONTROLLER, DIXELL (XR20CX-4R0F1)	1
14	H00205	TEMPERATURE SENSOR NTC (118" LENGTH)	1
15	HC00357	KEY-DOOR, LOCK (SOLD IN PACK OF TWO)	2
17	C2194677	DOOR SWITCH 3 PIN WHITE (AFTER START OF HC)	2
18	HC2319.1	UPPER SHROUD, 2DR TOP MOUNT (FROM DATE CODE 2111)	1
18	HC2319.1C	UPPER SHROUD, 2DR TOP MOUNT (FROM DATE CODE 2111) MOTAK/CENTAUR	1
19	H00321	HINGE, SHROUD UPPER	2
20	C20006	COVER, SCREEN, BACK CONDENSER, 2DR	1
21	C2194681	POWER CORD, 18AWG/NEMA 5-15P	1
22	NON-STOCKING	COMPRESSOR MOUNTING PANEL	1
23	H00039F	COMPRESSOR (EM2X3125U) W/ FILTER DRYER	1
23	H00228	START KIT FOR EM2X3125U	1
23	H01302	CAPILLARY TUBE .055" ID X 118.11" L	1
25	H00341	FILTER DRIER	1
26	RD00111	CONDENSER FAN GRILL	1
27	H00110	CONDENSER FAN MOTOR, 9W, M4Q045-CA27-04/CA01	1
28	HC0346	CONDENSER COIL (HC-HGD12F)	1
29	C30302	CONDENSER DRAIN BOX, TOP MOUNT	1

No.	PART #	DESCRIPTION	QTY
30	C20009	COVER, SCREEN, TOP, CONDENSER, 2DR	1
31	NON STOCKING	EVAPORATOR SUPPORT	1
32	H00335	SENSOR CLIP	1
33	H00112	EVAPORATOR FAN GUARD, WHITE	1
34	H00114-1	EVAPORATOR FAN MOTOR, ECM7108 (ECM7108AAA1DA406) (1082 CFM, 1300 RPM) 100-120V 50/60HZ, 14W	1
35	HC0351R	EVAPORATOR COIL (HC-54R)	1
36	GHC3014	AIR DUCT	1
38	H00143.1	DRAIN PAN, EVAPORATOR 54F (USE AFTER 1409)	1
39	HC0131	MOTOR SUPPORT, EVAP FAN, WHITE (2 DOOR)	1
40	H00136S	MOTOR SUPPORT, EVAP FAN (REPLACES H00136)	1
41	HC0147	SUCTION PIPE	1
42	C3234860	PILASTER SHELF CLIP	24
43	C2194688	LED LIGHT STRIP (REACH-IN) (LED2835, 2.4W, 24 VDC)	1
44	H03343	PILASTER	8
45	H104070118	LED POWER SUPPLY (24VAC/6.7W)	1
46	C20029	HINGE, UPPER RIGHT ONLY	2
47	NON-STOCKING	MOUNTING BRACKET	1
48	H00215	TERMINAL BLOCK, 5 POLE	1
50	HC00024-1	MULLION, CENTER (REFRRIGERATOR, TSI, AFTER CODE 2201)	1
51	HC00112-1	MULLION BRACKET, MIDDLE (USE AFER DATE CODE 2201)	2
52	H00336-1	DRAIN JOINT	1
53	NON-STOCKING	DISCHARGE PIPE CLIP	2
54	C30002-2	CONDENSER DRAIN BOX COVER (USE FROM DATE CODE 2201)	1
55	H108110138	EVAPORATOR FAN GUARD	1
56	NON STOCKING	SUPPORT PAN	1
57	H00336	DRAIN JOINT	1
58	G30002	DRAIN FITTING (F)	1
59	G30001	DRAIN PIPE FITTING	1

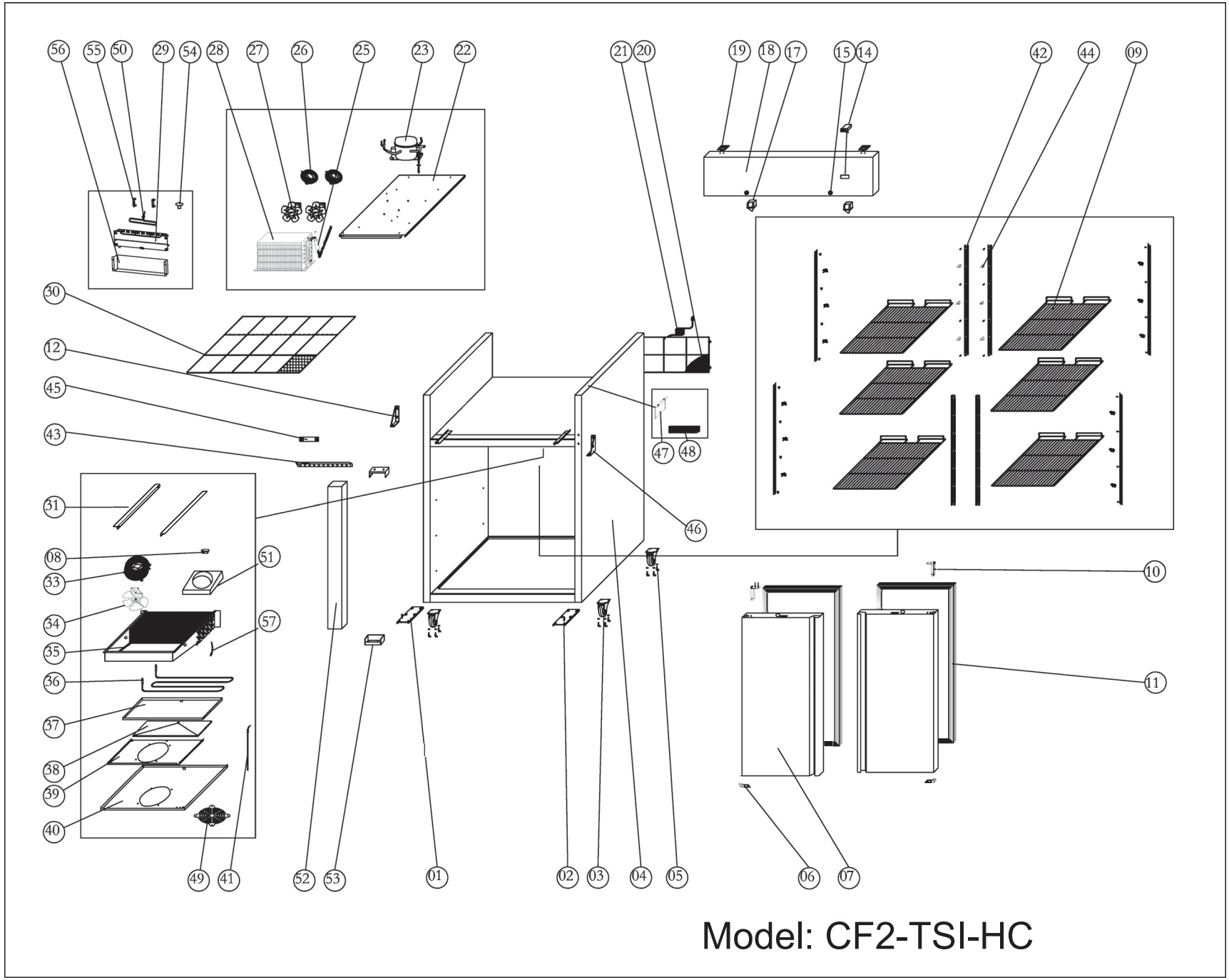

Model: CF2-TSI-HC

Parts List for Model: CF2-TSI-HC

No.	PART #	DESCRIPTION	QTY
1	C20021	HINGE, LOWER LEFT/RIGHT TOP-MOUNT (USE AFTER DATE CODE 2201)	1
2	H00327.1	HINGE PIN W/NUT & BUSHING (NEW STYLE)	2
3	H00316	CASTER, 4" DIAMETER W/BRAKE	2
4	NON STOCKING	CABINET	1
5	H00317	CASTER, 4" DIAMETER, W/O BRAKE	2
6	H00326	HINGE AXIS JACKET, BOTTOM	2
7	HC0324-2	DOOR LEFT/RIGHT (SS INTERIOR)	2
8	H03335	SENSOR CLIP	1
9	H00308	SHELF, LEFT/RIGHT (23.62" X 24.33")	6
10	HC0328	DOOR CLOSURE	2
11	H00325-2	GASKET, DOOR TOP MOUNT (24-3/4 X 61-7/16 BLACK)	1
12	C20028	HINGE, UPPER LEFT ONLY	2
14	HC0204	CONTROLLER, DIXELL (XR60CX-4R0F1)	1
14	H00205	TEMPERATURE SENSOR NTC (118" LENGTH)	2
15	HC00357	KEY-DOOR, LOCK (SOLD IN PACK OF TWO)	2
17	C2194677	DOOR SWITCH 3 PIN WHITE (AFTER START OF HC)	2
18	HC2319.1	UPPER SHROUD, 2DR TOP MOUNT (FROM DATE CODE 2111)	1
18	HC2319.1C	UPPER SHROUD, 2DR TOP MOUNT (FROM DATE CODE 2111) (MOTAK/CENTAUR)	1
19	H00321	HINGE, SHROUD UPPER	2
20	C20006	COVER, SCREEN, BACK CONDENSER, 2DR	1
21	C2194684	POWER CORD, 14AWG/NEMA 5-15P	1
22	NON-STOCKING	COMPRESSOR MOUNTING PANEL	1
23	HC0014F	COMPRESSOR (SCE18CNLX) W/ FILTER DRYER	1
23	HC0014K	START KIT FOR SCE18CNLX	1
23	H00304	CAPILLARY TUBE .055" ID X 129.92" L	1
25	H00341	FILTER DRIER	1
26	HC0113	CONDENSER FAN GRILL	2
27	H00125	CONDENSER FAN MOTOR, BD03-04/CO6 (5W)	2
28	HC0348	CONDENSER COIL (TWO FAN) (HC-54F)	1

No.	PART #	DESCRIPTION	QTY
29	C30302	CONDENSER DRAIN BOX, TOP MOUNT	1
30	C20009	COVER, SCREEN, TOP, CONDENSER, 2DR	1
31	NON STOCKING	EVAPORATOR SUPPORT	1
33	H00112-1	FAN GUARD, EVAPORATOR	1
34	H00114-1	EVAPORATOR FAN MOTOR, ECM7108 (ECM7108AAA1DA406) (1082 CFM, 1300 RPM) 100-120V 50/60HZ, 14W	1
35	HC0351F	EVAPORATOR COIL (G-54F)	1
36	HC0202	DEFROST HEATING ELEMENT	1
37	H00143.1	DRAIN PAN, EVAPORATOR 54F (USE AFTER 1409)	1
38	NON STOCKING	SUPPORT PAN	1
39	GHC03921	EVAPORATOR FAN SUPPORT	1
40	H00136S	MOTOR SUPPORT, EVAP FAN (REPLACES H00136)	1
41	H00212	HEATER, DRAIN PIPE	1
42	C3234860	PILASTER SHELF CLIP	24
43	C2194688	LED LIGHT STRIP (REACH-IN) (LED2835, 2.4W, 24 VDC)	1
44	H03343	PILASTER	8
45	H104070118	LED POWER SUPPLY (24VAC/6.7W)	1
46	C20029	HINGE, UPPER RIGHT ONLY	2
47	NON-STOCKING	MOUNTING BRACKET	1
48	H00215	TERMINAL BLOCK, 5 POLE	1
49	H108110138	EVAPORATOR FAN GUARD	1
50	HRI2004	DISCHARGE PIPE	1
51	GHC3014	AIR DUCT	1
52	HC00118-1	MULLION, CENTER (FREEZER, TSI, AFTER CODE 2201)	1
53	HC00112-1	MULLION BRACKET, MIDDLE (USE AFER DATE CODE 2201)	2
54	H00336-1	DRAIN JOINT	1
55	NON-STOCKING	DISCHARGE PIPE CLIP	2
56	C30002-2	CONDENSER DRAIN BOX COVER (USE FROM DATE CODE 2201)	1
57	H00207	FUSE, THERMAL, DEFROST HEATER	1

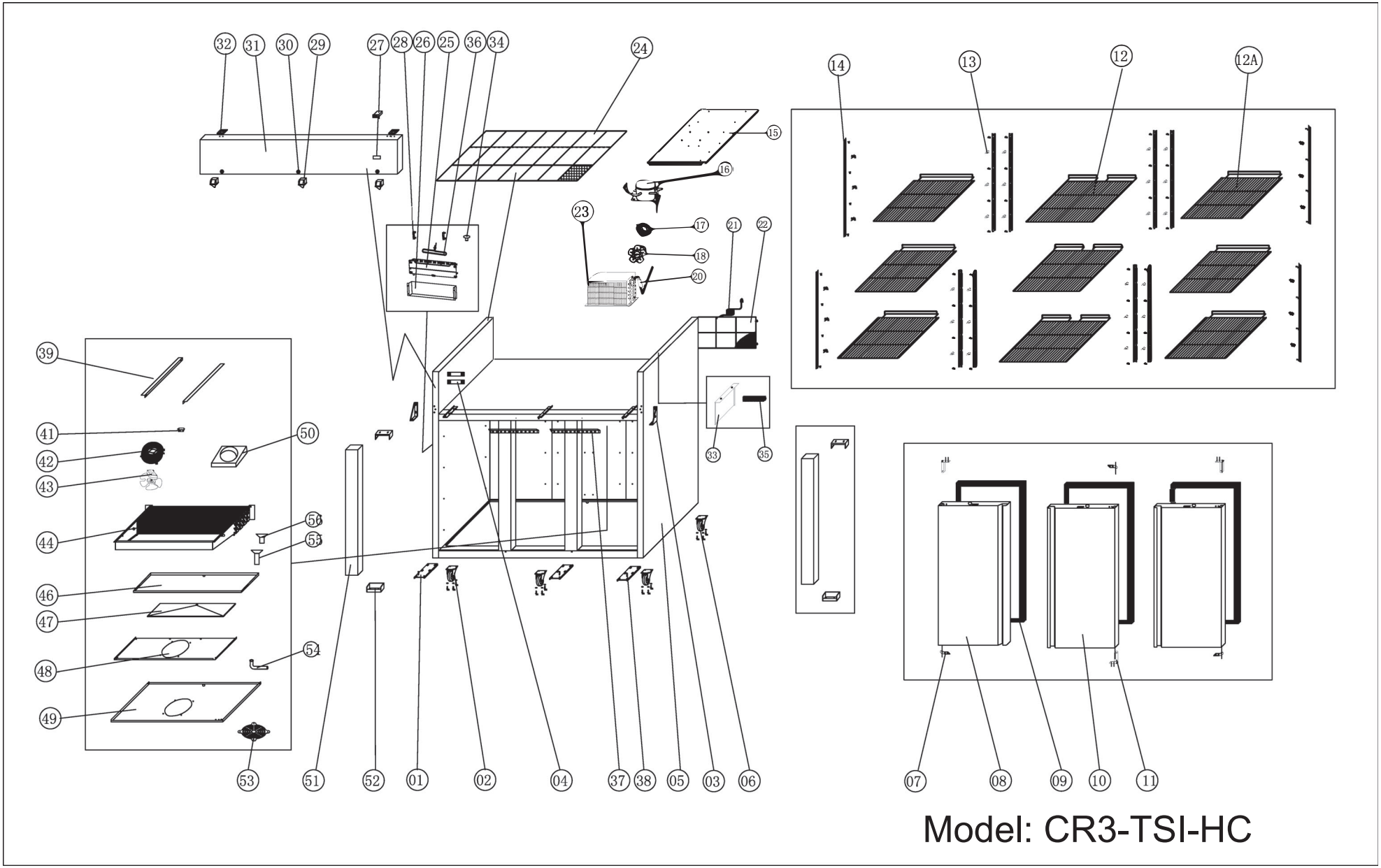

Model: CR3-TSI-HC

Parts List for Model: CR3-TSI-HC

No.	PART #	DESCRIPTION	QTY
1	H20022	HINGE, LOWER LEFT/RIGHT (TOP-MOUNT)	3
2	H00316	CASTER, 4" DIAMETER W/BRAKE	3
3	C20028	HINGE, UPPER LEFT ONLY	
3	C20029	HINGE, UPPER RIGHT ONLY	
3	C20027	HINGE, UPPER, MIDDLE	
4	H104070118	LED POWER SUPPLY (24VAC/6.7W)	2
5	NON STOCKING	CABINET	1
6	H00317	CASTER, 4" DIAMETER, W/O BRAKE	2
7	H00326	HINGE AXIS JACKET, BOTTOM	3
8	HC0324-2	DOOR, SOLID, TOP MOUNT, SS INTERIOR, (AFTER DATE CODE 2201, HC)	3
9	H00325-2	GASKET, DOOR TOP MOUNT (24-3/4 X 61-7/16 BLACK)	3
11	HC0328	DOOR CLOSURE	3
12A	H00308	SHELF, LEFT/RIGHT (23.62" X 24.33")	6
12	H00310	SHELF, MIDDLE (24.3" X 26.0")	3
13	C3234860	PILASTER SHELF CLIP	36
14	H03343	PILASTER	12
15	NON-STOCKING	COMPRESSOR MOUNTING PANEL	1
16	HC0009F	COMPRESSOR (NUG90LR) W/ FILTER DRIER	1
16	H00230	START KIT FOR NUG90LR	1
16	H00305	CAPILLARY TUBE .063" ID X 177.17" L	1
17	HC0113	CONDENSER FAN GRILL	1
18	H00125	CONDENSER FAN MOTOR, BD03-04/CO6 (5W)	1
20	H00341	FILTER DRIER	1
21	C2194684	POWER CORD, 14AWG/NEMA 5-15P	1
22	C20007	COVER, SCREEN, BACK CONDENSER, 3DR	1
23	HC0348	CONDENSER COIL (TWO FAN) (HC-54F)	1
24	C20010	COVER, SCREEN, TOP CONDENSER, 3D	1
25	C30302	CONDENSER DRAIN BOX, TOP MOUNT	1
26	C30002-2	CONDENSER DRAIN BOX COVER (USE FROM DATE CODE 2201)	1

No.	PART #	DESCRIPTION	QTY
27	H00219-2	CONTROLLER, DIXELL (XR20CX-4R0F1)	1
27	H00205	TEMPERATURE SENSOR NTC (118" LENGTH)	1
28	NON-STOCKING	DISCHARGE PIPE CLIP	2
29	C2194677	DOOR SWITCH 3 PIN WHITE (AFTER START OF HC)	3
30	HC00357	KEY-DOOR, LOCK (SOLD IN PACK OF TWO)	1
31	CC0320S-TSI	UPPER SHROUD, 3DR, TOP MOUNT (MOTAK/CENTAUR)	1
31	HC0320S-TSI	UPPER SHROUD, 3DR, TOP MOUNT (REPLACES HC0320-TSI)	1
32	H00321	HINGE, SHROUD UPPER	2
33	NON-STOCKING	MOUNTING BRACKET	1
34	H00336-1	DRAIN JOINT	1
35	H00215	TERMINAL BLOCK, 5 POLE	1
36	HC0157	SUCTION PIPE	1
37	C2194688	LED LIGHT STRIP (REACH-IN) (LED2835, 2.4W, 24 VDC)	2
38	H00327.1	HINGE PIN W/NUT & BUSHING (NEW STYLE)	3
39	NON STOCKING	EVAPORATOR SUPPORT	1
41	H00335	SENSOR CLIP	1
42	H00112	EVAPORATOR FAN GUARD, WHITE	1
43	H00114-3	EVAPORATOR FAN MOTOR, L=1200, 100-120V 50/60HZ, 14W	1
44	HC0351F	EVAPORATOR COIL (G-54F)	1
46	H00143.1	DRAIN PAN, EVAPORATOR 54F (USE AFTER 1409)	1
47	NON STOCKING	SUPPORT PAN	1
48	GHC03921	EVAPORATOR FAN SUPPORT	1
49	H00136S	MOTOR SUPPORT, EVAP FAN (REPLACES H00136)	1
50	GHC3014	AIR DUCT	1
51	HC00024-1	MULLION, CENTER (REFRRIGERATOR, TSI, AFTER CODE 2201)	2
52	HC00112-1	MULLION BRACKET, MIDDLE (USE AFER DATE CODE 2201)	4
53	H00121-1	EVAPORATOR FAN GUARD	1
54	H00336	DRAIN JOINT	1
55	G30002	DRAIN FITTING (F)	1
56	G30001	DRAIN PIPE FITTING	1

PARTS LIST
FOR REACH-IN MODELS:
CR1-TSI-HC, CF1-TSI-HC, CR2-TSI-HC, CF2-TSI-HC, CR3-TSI-HC

For Parts please Call (704) 900-2068

Revision Date: January 10, 2025